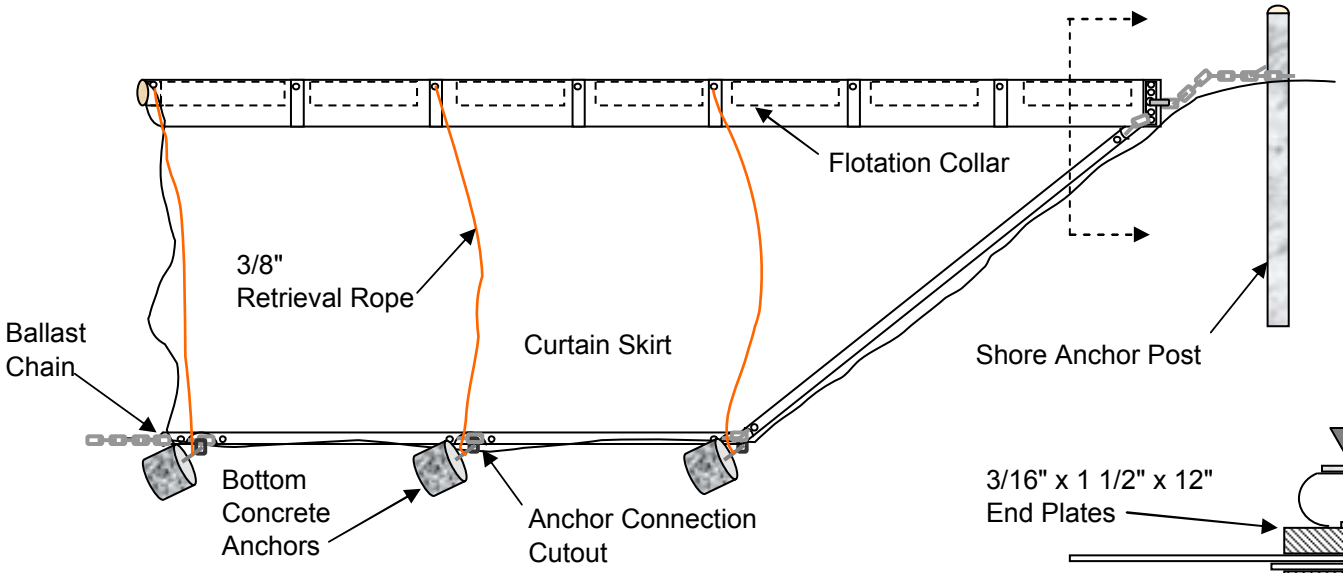

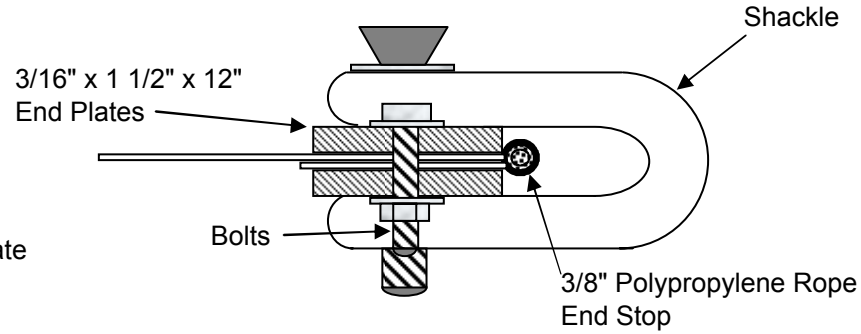

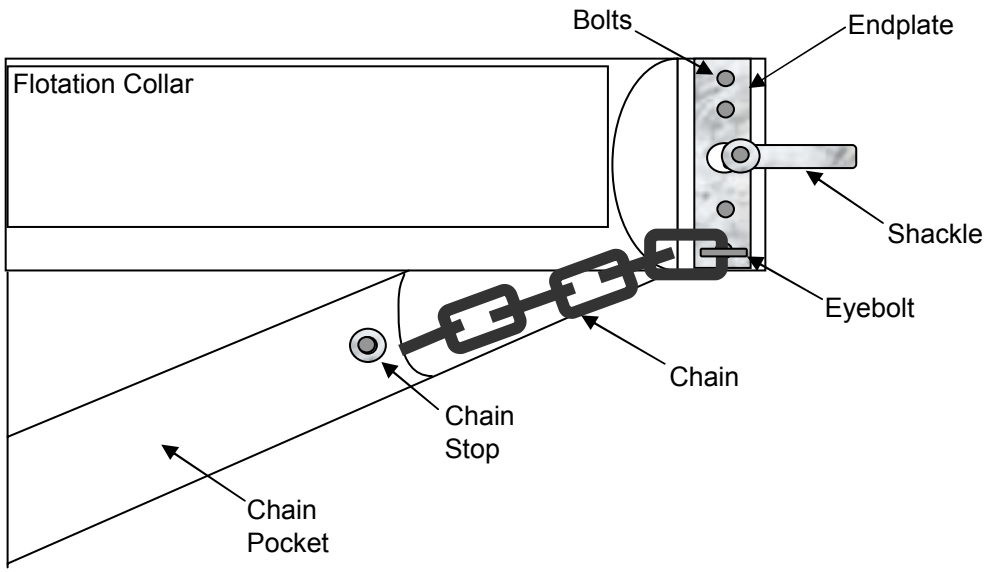

Baffle Curtain Details

Project:	
Location:	
Size of Curtain:	
# of Curtains:	
Prepared By:	
This drawing is *not to scale*	
Engineered Textile Products, Inc. P.O. Box 7474 Mobile, Alabama 36670-0474	